VERDERAIR

VERDERAIR

Double Diaphragm Pumps

VERDER GPM

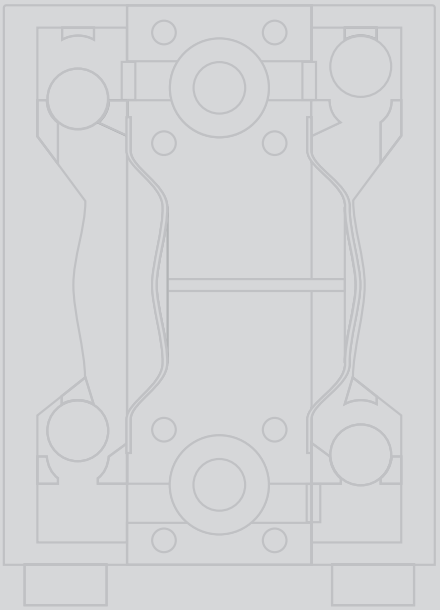

Verderair Double Diaphragm Pumps are problem solvers in all industries

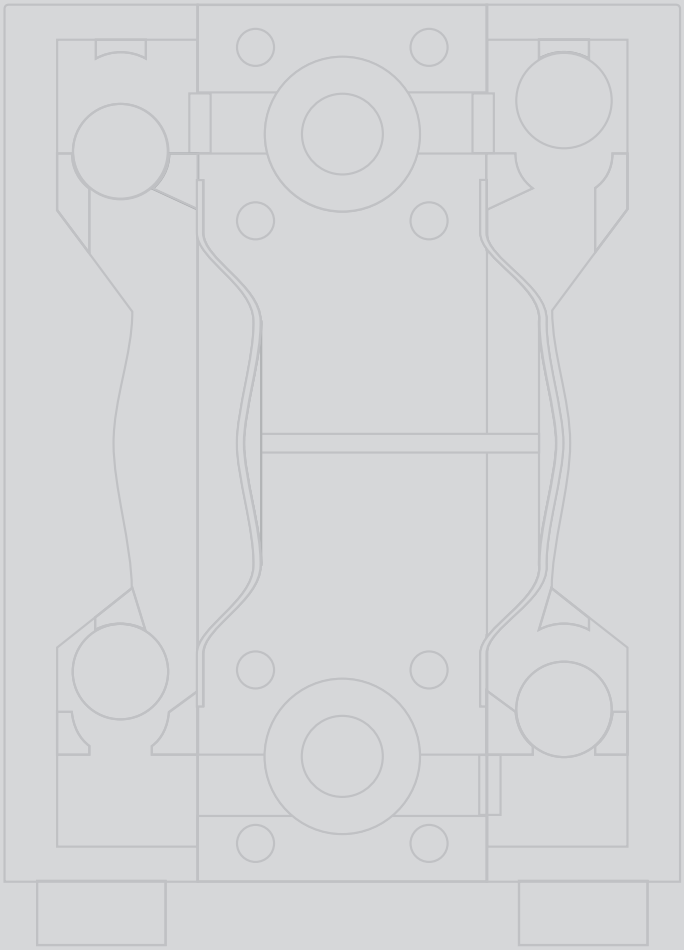

Verderair
Double Diaphragm Pumps

The series of Verderair double diaphragm pumps are highly engineered diaphragm pumps, delivering a smooth, reliable flow for all circumstances. The new air valve design guarantees a perfect, non-stalling operation, even at low pressure. The air valve does not need any lubrication. Thanks to their unique design, the pumps are able to handle very abrasive and/or viscous products.

The Verderair pumps will run dry indefinitely without damage. Verder has selected those materials which offer the best combination of benefits to the end user. The used wetted pump part materials are Acetal, Polypropylene, Kynar, Aluminum, Cast Iron and stainless steel. For ball and/or diaphragm, Verder selected PTFE, Hytrel, Santoprene, Viton, BUNA-N, SS and Acetal.

Flow range	up to 275 gpm
Pressure	up to 232 psi

Features and advantages

- Easy installation
- Performs on-demand in remote locations
- Extremely portable for multi-location use
- Easy to maintain
- Easy to operate
- Can run dry without pump damage
- No air lubrication necessary

Double diaphragm pumps are being used in a wide range of industrial areas:

Beverage industry
Yeast, diatomaceous earth, slurry, dregs, liquid hops, sugar syrup, wine, fruit, corn syrup.

Pharmaceutical industry
Vegetable extracts, tablet pastes, alcohols, filtering aids, ultra filtration, blood plasma.

Electronic industry
Solvents, electroplating baths, ultrapure liquids, carrier fluids for ultra-sonic washing, sulfuric nitric and acid wastes, etching acids, acetone, polishing compound.

Paint and coatings
Resins, solvents, wood preservative stain, concrete paints, titanium dioxide slurry, dispersions, varnish cleaning baths.

Food
Brine, chocolate, vinegar, molasses, dog & cat food, vegetable oil, honey, animal blood.

Working principle

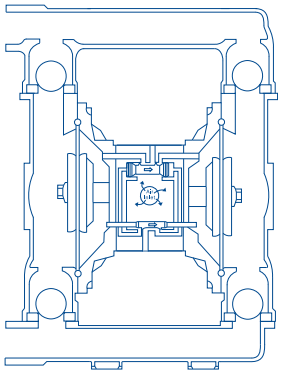

1. The air valve directs compressed air behind diaphragm 1 which is then passed directly to the liquid column. The diaphragm acts as a divide between the compressed air and the liquid. The compressed air moves the diaphragm away from the motor section of the pump. The opposite diaphragm is pulled towards the motor section by the connecting rod, which is connected to the diaphragm that is under pressure. Diaphragm 2 now carries out the air-expelling stroke; air from behind the diaphragm is then expelled through the discharge valve into the atmosphere. Diaphragm 2 moves in the direction of the motor section of the pump. Atmospheric pressure then forces the liquid towards the inlet manifold, where the ball is moved from its seat. This allows liquid to flow freely past the inlet ball and fill the liquid chamber.

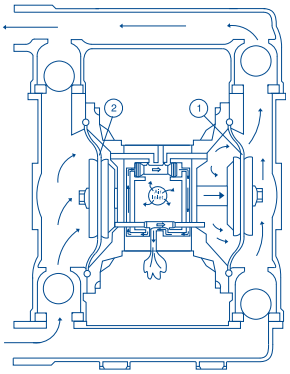

2. Once the diaphragm under pressure, diaphragm 1, has reached the limit of its outward stroke, the air seat leads compressed air behind diaphragm 2. This compressed air pushes diaphragm 2 away from the motor section, resulting in diaphragm 1 being pulled towards the motor section. Diaphragm 2 pushes the inlet ball onto its seat through the hydraulic forces that develop. The same hydraulic forces cause the discharge ball to be lifted from its seat, while the opposite discharge ball is forced onto its seat. The inlet ball is lifted from its seat, so that the liquid can be transported to fill the liquid chamber.

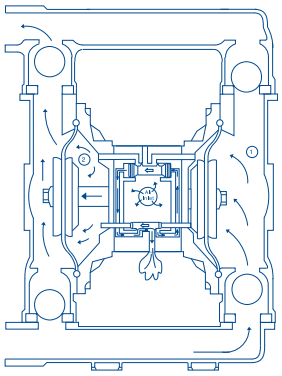

3. When the stroke is completed, the air valve once again brings air behind diaphragm 1 and diaphragm 2 starts on the air-expelling stroke.

Model VA standard also available in ATEX.
This pump model is an extension of the standard VA model. Materials of constructions are of conductive polypropylene, ideal for the toughest industrial applications.

Flow	max. 275 gpm
Pressure	max. 120 psi

OVERVIEW OF PUMP MODELS

Model VA *standard*

These diaphragm pumps provide flexible, reliable flow in all circumstances. The design of the control valve guarantees perfect operation that never jams and does not have to be lubricated even at low compressed air pressure and high backpressure. Verder has chosen those materials that offer the end user the best combination of advantages.
Both metallic and non metallic versions are available.

Flow	max. 275 gpm
Pressure	max. 120 psi

Model VA *high pressure*

The high pressure range has exactly the same excellent features as the standard pumps. Additionally they can provide output pressures of up to 275 psi.

Flow	max. 140 gpm
Pressure	max. 232 psi

Model VA *FDA*

Model FDA is the hygienic model of double diaphragm pumps. This new pump model is especially designed for the food, pharmaceutical and cosmetic industry. The FDA pumps have a quick knock down system: easy to clean redesigned diaphragms increasing life time.

Flow	150 gpm
Pressure	max. 116 psi

Model VA *hygienic*

These heavy duty double diaphragm pumps are constructed according to 3-A standards. This pump delivers the highest flow rate of any air operated 3-A certified double diaphragm pump.

Flow	max. 149 gpm
Pressure	max. 120 psi

Materials of construction

	Wetted parts	Diaphragms	Balls	Seats
Aluminum	X			
Buna-N		X	X	X
Cast Iron	X			
EPDM		X	X	X
PVDF	X			X
Polypropylene	X			X
316 St. steel	X	X	X	
Teflon		X	X	
Viton		X	X	X
Hytrel		X	X	X
Acetal	X		X	X
Santoprene		X	X	X
Geolast		X	X	X

Model	Series	Flow range	Air pressure
VA 8	non-metallic	5 gpm	100 psi
VA 10	non-metallic	7 gpm	100 psi
VA 15	non-metallic	15 gpm	100 psi
VA 20	metallic	16 gpm	100 psi
VA 25	non-metallic	50 gpm	120 psi
VA 25	metallic	50 gpm	120 psi
VA 40	non-metallic	100 gpm	120 psi
VA 40	metallic	100 gpm	120 psi
VA 50	non-metallic	150 gpm	120 psi
VA 50	metallic	150 gpm	120 psi
VA 80	metallic	275 gpm	120 psi
VA 25 HP	metallic	21 gpm	230 psi
VA 40 HP	metallic	50 gpm	232 psi
VA 50 HP	metallic	73 gpm	232 psi
VA 80 HP	metallic	140 gpm	232 psi

Suction discharge	Casing material	Max. solids size
1/4″ NPT	KY/PP/AC	0.063 in
3/8″ NPT	PP/AC	0.063 in
1/2″ NPT	KY/PP/AC	0.094 in
3/4″ NPT	SS 316/ALU	0.094 in
1″ Flanged	KY/PP/CPP	0.125 in
1″ NPT	SS 316/ALU/HA	0.125 in
1.5″ Flanged	KY/PP	0.188 in
1.5″ NPT	SS 316/ALU	0.188 in
2″ Flanged	KY/PP	0.25 in
2″ NPT	SS 316/ALU/CI	0.25 in
3″ Flanged	ALU	0.375 in
1″ NPT	SS 316/ALU	0.125 in
1.5″ NPT	SS 316/ALU	0.188 in
2″ NPT	SS 316/ALU/CI	0.25 in
3″ Flanged	ALU	0.375 in

Verderair VA standard

Verderair are highly engineered diaphragm pumps, delivering a smooth, reliable flow in all circumstances. The new air valve design guarantees a perfect, non-stalling operation, even at low pressure and does not need any lubrication. Thanks to their unique design, they are able to handle very abrasive and/or viscous products. The Verderair will run dry indefinitely without damage.

Verderair offers a complete range of air operated diaphragm pumps (including ATEX pumps) for a wide range of applications in almost all industries.

Flow range	0.1 up to 275 gpm
Pressure	up to 125 psi

Features and advantages

- Easy installation
- Bolted chambers for safe operation
- Rugged, cast feet mounting holes keep your pump from vibrating
- Adaptable as cover-mounted, pail-mounted or wall-mounted units
- Immersible in most situations
- Easy to adapt
- A large range of material options for fluid versatility with extended pump life
- Air powered convenience for use in a variety of installations with no electrical hazard
- Performs on-demand in remote locations
- Extremely portable for multi-location use
- Pumps move a wide variety of coatings, solvents, sealants, adhesives, inks, acids and more
- Easy to maintain
- Seal-less, leak proof design prevents fluid waste and mess
- Even in wet air, the stainless steel diaphragm rod in the air motor is designed for long life and corrosion resistance
- Easy to operate
- Pumps reduce or eliminate manual filling and transport
- Reduces the risk of hazardous spills and employee exposure
- Multiple dispense points throughout your plant can easily be served
- Can run dry without pump damage
- No air lubrication necessary

Applications

- Drum transfer
- Circulation of low/high viscosity inks, stains and dyes
- Waste fluid removal from quench tanks, sumps and spray booths
- Process transfer filling and emptying process vessels and mixing tanks
- Slurries and sludge
- Food transfer
- Ceramics
- Truck unloading

VERDERAIR VA 8

Technical data		
Weight [lbs/kg]	Acetal	2.5 /1.1
	PP	2.0/0.9
	Kynar	2.8/1.3
Suction lift [ft/m]	Dry	10/3
	Wet	14.5/4.4
Temperature max [°F/°C]	Acetal	180/82
	PP	180/82
	Kynar	180/82
Max. particle size [in/mm]		0.06/1.5
Non wetted material, center section	PP	

codes VA 8 no.2 no.3 no.4	
no.2	wetted material
	AC = Acetal
	PP = Polypropylene
	KY = Kynar
no.3	seat material
	AC = Acetal
	PP = Polypropylene
	KY = Kynar
no.4	valve material
	TF = Teflon
	SP = Santoprene

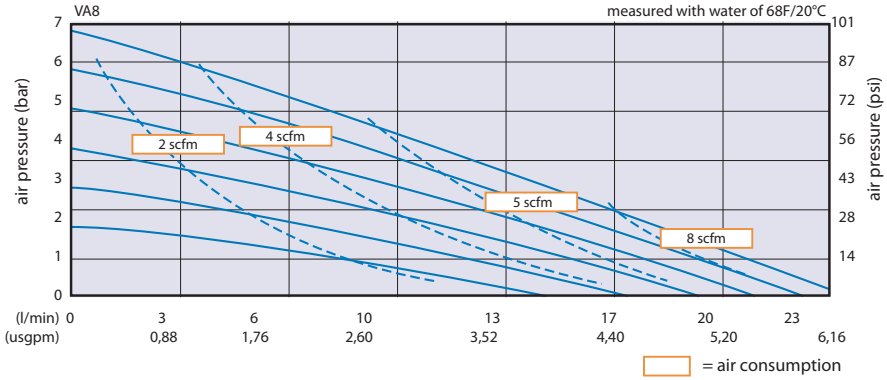

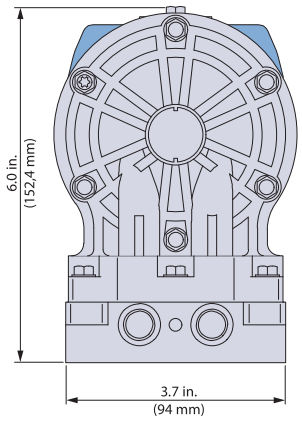

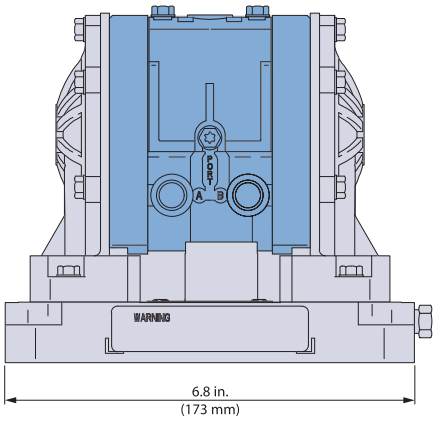

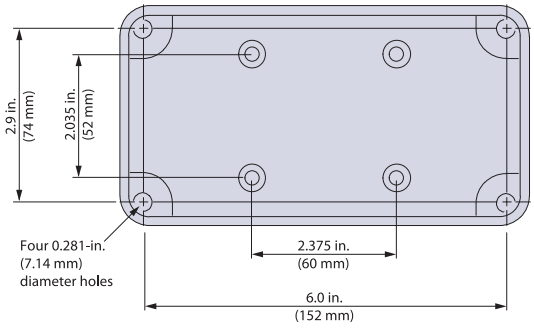

VERDERAIR VA 10

Technical data		
Weight [lbs/kg]	Acetal	5.2/2.4
	PP	4.75/2.2
Suction lift [ft/m]	Dry	12/3.7 -7/2.1
	Wet	21/6.4 -12/3.7
Temperature max [°F/°C]	Acetal	150/65.5
	PP	150/65.5
Max. particle size [in/mm]		0.06/1.6
Non wetted material, center section	pp	

codes VA 10 no.2 no.3 no.4 no.5
no.2 wetted material
AC = Acetal
PP = Polypropylene
no.3 seat material
AC = Acetal
PP = Polypropylene
SS = Stainless Steel
no.4 valve material
TF = Teflon
HY = Hytrel
SS = Stainless Steel
BN = Buna-N
SP = Santoprene
no.5 diaphragm material
TF = Teflon
HY = Hytrel
BN = Buna-N
SP = Santoprene

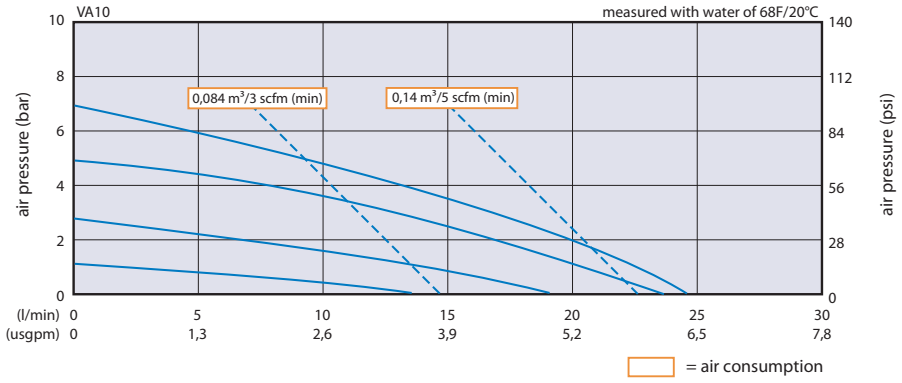

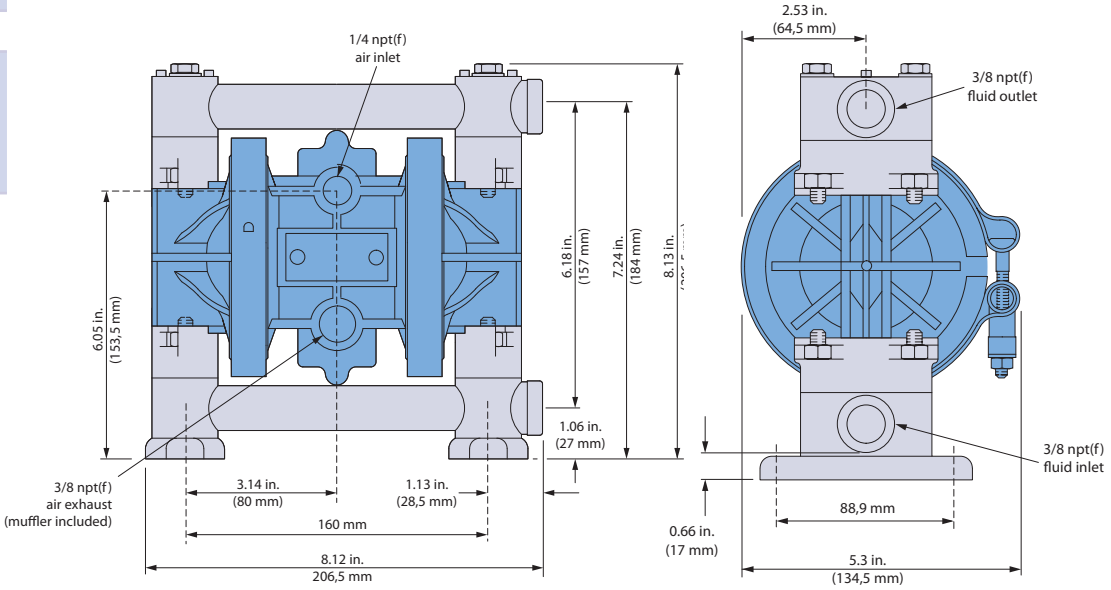

VERDERAIR VA 15

Technical data		
Weight [lbs/kg]	Acetal	7.8/3.5
	PP	6.5/2.9
	Kynar	8.5/3.9
Suction lift [ft/m]	Dry	15/4.5
	Wet	25/7.6
Temperature max [°F/°C]	Acetal	180/82*
	PP	150/66*
	Kynar	225/107
Max. particle size [in/mm]		0.09/2.5
Non wetted material, center section	PP	

** 220/104.4 with Teflon diaphragms*

codes VA 15
no.2 no.3 no.4 no.5

no.2 wetted material
- AC = Acetal
- PP = Polypropylene
- KY = Kynar

no.3 seat material
- AC = Acetal
- PP = Polypropylene
- KY = Kynar
- SS = Stainless Steel

no.4 valve material
- TF = Teflon
- SP = Santoprene
- SS = Stainless Steel
- HY = Hytrel
- BN = Buna-N
- VT = Viton

no.5 diaphragm material
- TF = Teflon
- SP = Santoprene
- BN = Buna-N
- VT = Viton
- HY = Hytrel

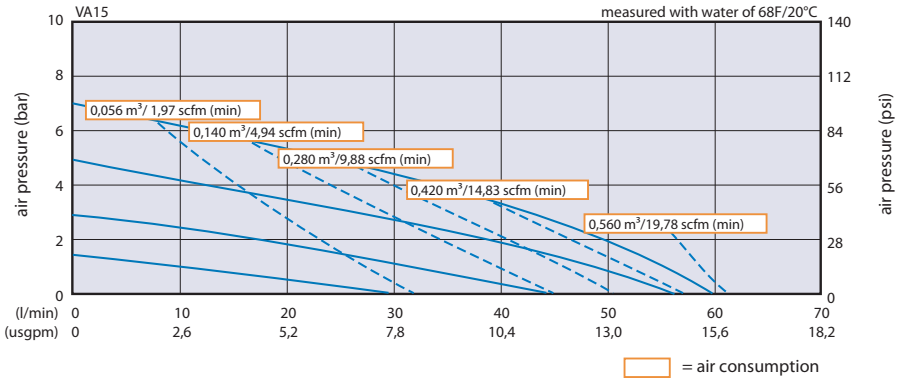

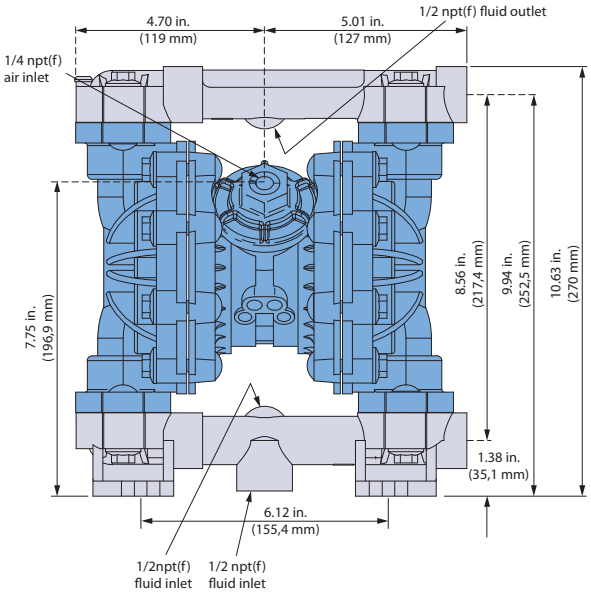

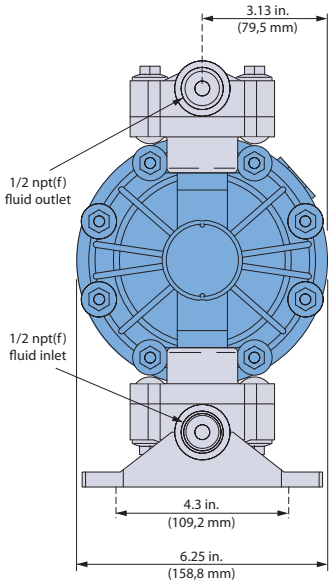

VERDERAIR VA 20

Technical data		
Weight [lbs/kg]	Aluminum	8.5/3.9
	Stainless Steel	18/8.2
Suction lift [ft/m]	Dry	15/4.5
	Wet	25/7.6
Temperature max [°F/°C]	Aluminum	220/107
	Stainless Steel	220/107
Max. particle size [in/mm]		0.09/2.5
Non wetted material, center section	PP	

codes VA 20
no.2 no.3 no.4 no.5

no.2 wetted material
- AL = Aluminum
- SS = Stainless Steel

no.3 seat material
- AC = Acetal
- PP = Polypropylene
- KY = Kynar
- SS = Stainless Steel

no.4 valve material
- TF = Teflon
- HY = Hytrel
- SP = Santoprene
- SS = Stainless Steel
- BN = Buna-N
- VT = Viton

no.5 diaphragm material
- TF = Teflon
- HY = Hytrel
- SP = Santoprene
- BN = Buna-N
- VT = Viton

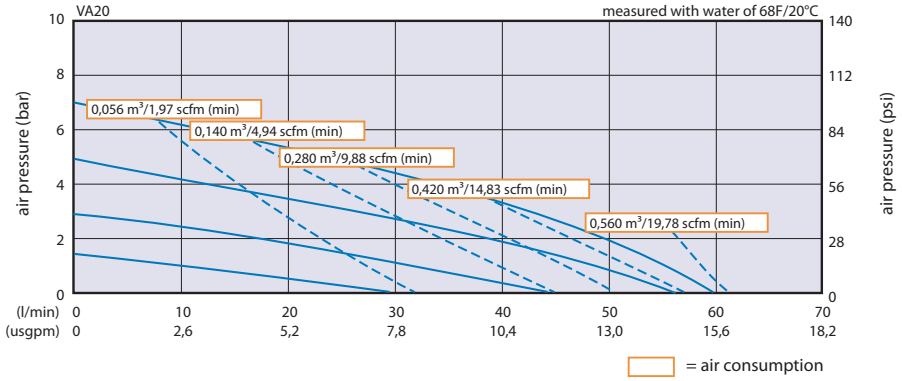

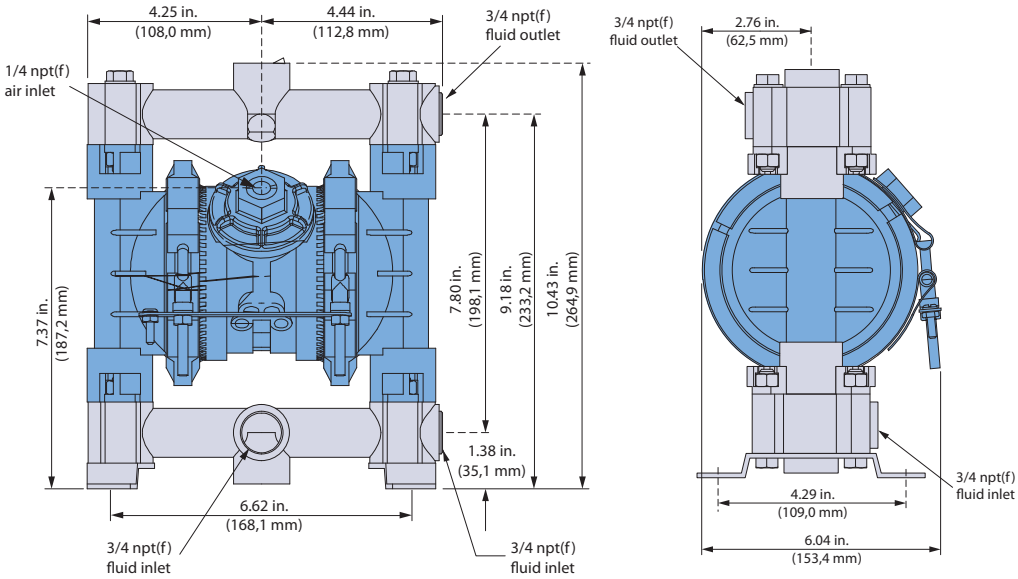

VERDERAIR VA 25 non-metallic

codes VA 25

A. wetted material

C = Conductive pp*
K = Kynar
P = PP

AC. seat material

AC = Acetal
AL = Aluminum
BN = Buna-N
FK = FKM Viton
GE = Geolast
PP = Polypropylene
PV = PVDF
SP = Santoprene
SS = 316 Stainless Steel
TP = TPE (Hytrel)

AC. ball material

AC = Acetal
BN = Buna-N
CR = Neoprene
CW= Neoprene
FK = FKM Viton
GE = Geolast
PT = PTFE
SP = Santoprene
SS = 316 Stainless Steel
TP = TPE (Hytrel)

A01. center body

A01 = Aluminum
C01 = Conductive PP
P01 = PP
Leak detection available

A01. diaphragm material

BN = Buna-N
CO = Polychloroprene overmolded (Neoprene)
FK = FKM Fluorelastomer (Viton)
GE = Geolast
PO = PTFE/EPDM overmolded
PT = PTFE/EPDM Two-Piece
TP = TPE (Hytrel)
SP = Santoprene

C1. covers

A1 = Aluminum standard ports, inch
A2 = Aluminum standard ports
C1 = Conductive PP, center flange
C2 = Conductive PP, end flange
P1 = PP, center flange
P2 = PP, end flange
S1 = Stainless steel, standard ports, inch
S2 = Stainless steel, standard ports

PT.

O rings = PTFE

Technical data

Weight [lbs/kg]	Acetal	22/10
	PP with Aluminium center section	19/8.6
	PP with Stainless Steel center section	32.2/14.6
	Kynar with Aluminium center section	25/11.3
	Kynar with Stainless Steel center section	35/16
Suction lift [ft/m]	Dry	2.1/3.7
	Wet	3.7/6.4
Temperature [°F/°C]	Acetal	40-150/5-65
	PP	40-150/5-65
	Kynar	40-150/5-65
Max. particle size [in/mm]		3.2
Non wetted material, center section	Epoxy coated Aluminum/Stainless Steel	

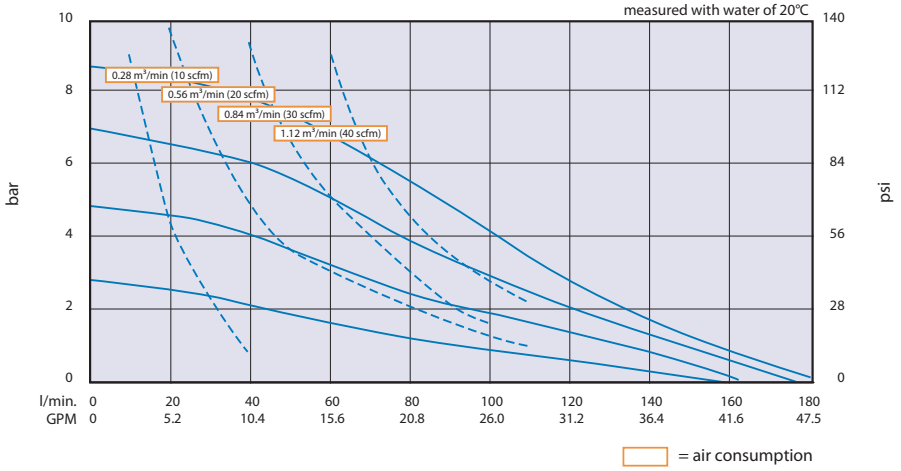

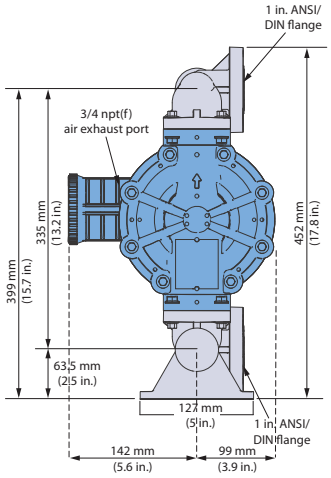

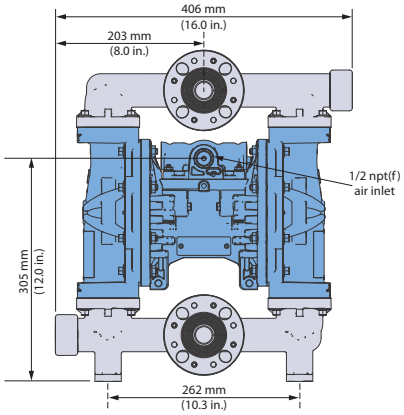

25 PP conductive PP
- Due to the extensive options of the VA25, a complete technical data sheet is also available.
- End flanged VA25 dimensional also available.

VERDERAIR VA 25 metallic

codes VA 25
A. material of casing
AL = Aluminum
HA = Hastalloy
SS = Stainless Steel
AC. material of seat
AC = Acetal
PP = Polypropylene
KY = Kynar
SS = Stainless Steel
HS = Hardened Steel
HY = Hytrel
SP = Santoprene
VT = Viton
BN = Buna-N
GE = Geolast
AC. material of valve
TF = Teflon
HS = Hardened Steel
HY = Hytrel
SP = Santoprene
BN = Buna-N
VT = Viton
GE = Geolast
AC = Acetal
SS = Stainless Steel
BN. material of diaphragm
TF = Teflon
HY = Hytrel
SP = Santoprene
BN = Buna-N
VT = Viton
GE = Geolast
AC. ball material
AC = Acetal
BN = Buna-N
CR = neoprene
CW = neoprene
FK = FKM Viton
GE = Geolast
PT = PTFE
SP = Santoprene
SS = 316 Stainless Steel
TP = TPE (Hytrel)
C1. covers
A1 = Aluminum standard ports, inch
A2 = Aluminum standard ports
C1 = Conductive PP, center flange
C2 = Conductive PP, end flange
P1 = PP, center flange
P2 = PP, end flange
S1 = Stainless steel, standard ports, inch
S2 = Stainless steel, standard ports

Technical data		
Weight [lbs/kg]	Aluminum	23/10.5
	Plastic	18/8.2
	PVDF	21/9.5
	Stainless Steel	
	with conductive polypropylene center	36.3/16.5
	with polypropylene center	37.3/16.9
	with aluminum center	41.4/18.8
	Hastelloy	41/18.6
Suction lift [ft/m]	Dry	16/4.9
	Wet	29/8.8
Temperature [°F/°C]	Aluminum	40-150/5-65
	Stainless Steel	40-150/5-65
Max. particle size [in/mm]		1.8/3.2

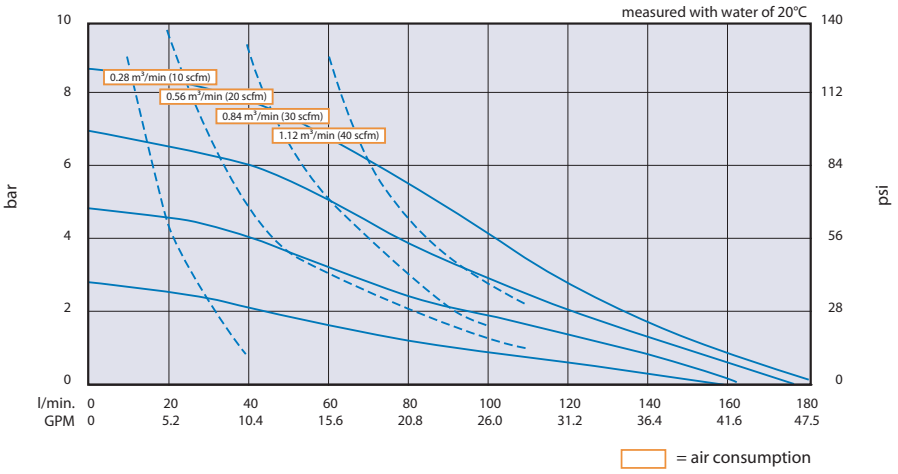

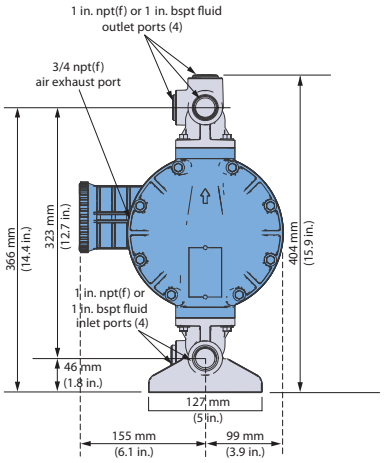

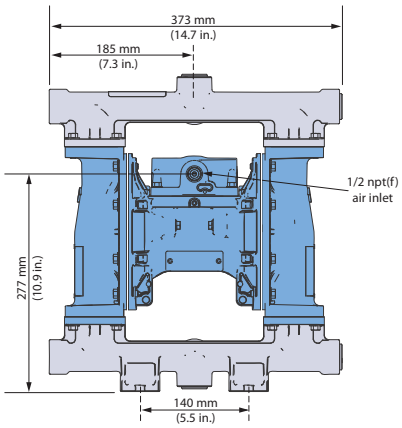

VA 25 aluminum
- Due to the extensive options of the VA25, a complete technical data sheet is also available.
- End flanged VA25 domensional also available.
- Stainless steel VA25 dimensional not shown.

VERDERAIR VA 40 metallic

Technical data		
Weight [lbs/kg]	Aluminum with Aluminum center section	33.5/15.2
	Stainless Steel with Aluminum center section	85.5/38.6
	Stainless Steel with Stainless Steel center section	98.8/44.8
Suction lift [ft/m]	Dry	18/5.48
	Wet	18/5.48
Temperature max [°F/°C]	Aluminum	150/65.5*
	Stainless Steel	150/65.5*
Max. particle size [in/mm]		0.19/4.8
Non wetted material, center section	Aluminum/Stainless Steel	

** 220/104.4 with Teflon diaphragms*

codes VA 40 no.2 no.3 no.4 no.5
no.2 wetted material
AL = Aluminum SS = Stainless Steel
no.3 seat material
PP = Polypropylene KY = Kynar SS = Stainless Steel HS = Hardened Steel HY = Hytrel SP = Santoprene GE = Geolast VT = Viton BN = Buna-N
no.4 valve material
AC = Acetal GE = Geolast HS = Hardened Steel HY = Hytrel SP = Santoprene TF = Teflon VT = Viton BN = Buna-N
no.5 diaphragm material
TF = Teflon HY = Hytrel SP = Santoprene VT = Viton GE = Geolast BN = Buna-N

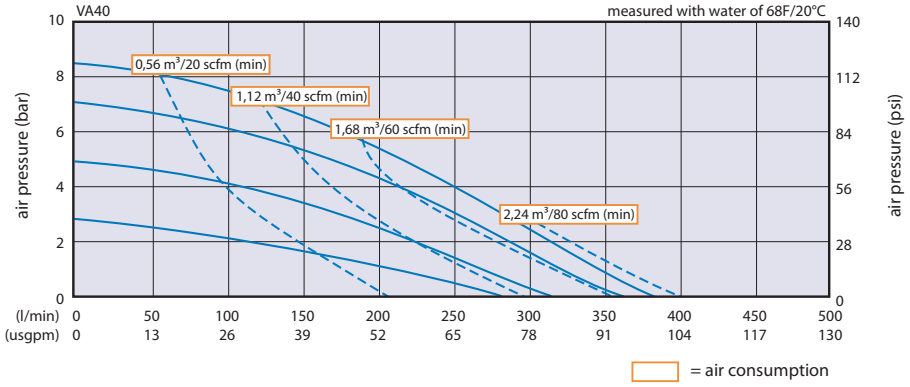

	Dimensions Aluminum pumps	Dimensions SST pumps
A	16.8 in	16.25/412.5
B	18.3 in	17.75/450
C	19.5 in	19.0/482.5

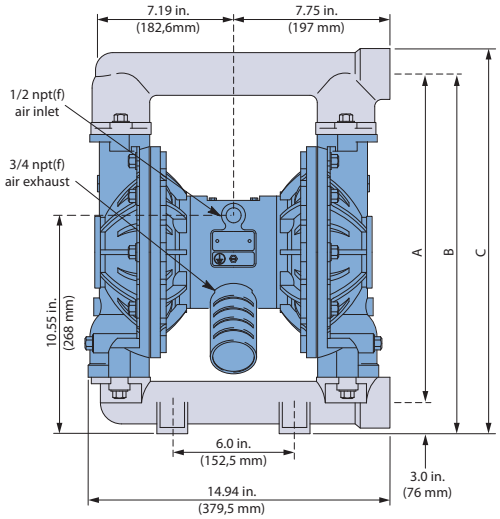

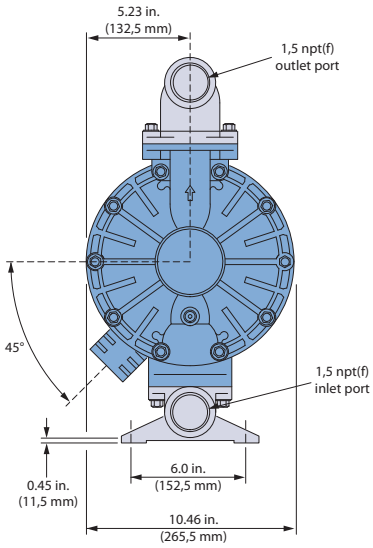

VERDERAIR VA 40 non-metallic

Technical data		
Weight [lbs/kg]	PP with Aluminum center section	35/16
	PP with Stainless Steel center section	48.3/21.9
	Kynar with Aluminum center section	49/22
	Kynar with Stainless Steel center section	62.3/28.2
Suction lift [ft/m]	Dry	18/5.48
	Wet	18/5.48
Temperature max [°F/°C]	PP	150/65.5*
	Kynar	150/65.5*
Max. particle size [in/mm]		0.19/4.8
Non wetted material, center section	Aluminum/Stainless Steel	

** 220/104.4 with Teflon diaphragms*

codes VA 40
no.2 no.3 no.4 no.5

no.2 wetted material

PP = Polypropylene
KY = Kynar

no.3 seat material

PP = Polypropylene
KY = Kynar
SS = Stainless Steel
HS = Hardened Steel
HY = Hytrel
SP = Santoprene
GE = Geolast
VT = Viton
BN = Buna-N

no.4 valve material

AC = Acetal
GE = Geolast
HS = Hardened Steel
HY = Hytrel
SP = Santoprene
TF = Teflon
VT = Viton
BN = Buna-N

no.5 diaphragm material

TF = Teflon
HY = Hytrel
SP = Santoprene
VT = Viton
GE = Geolast
BN = Buna-N

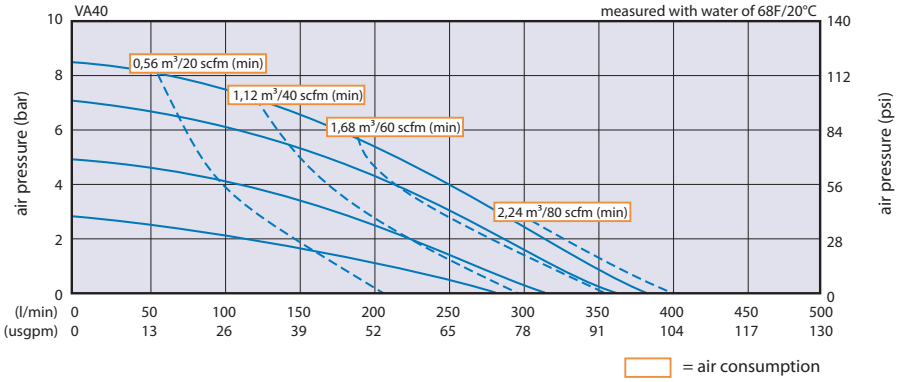

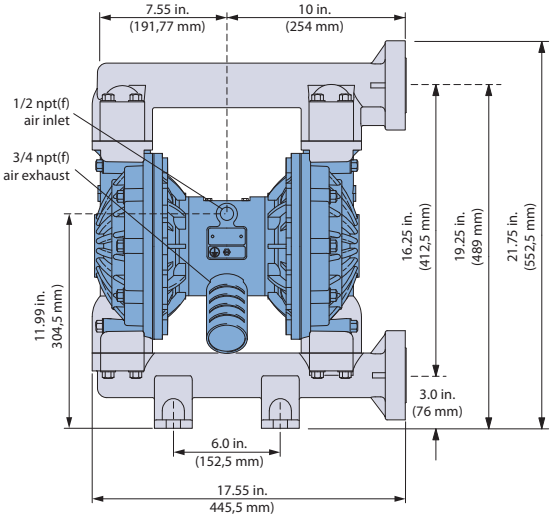

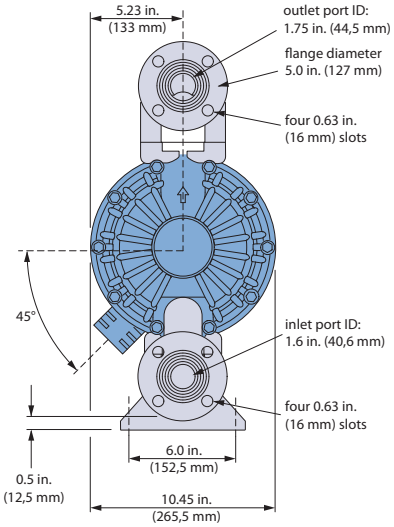

VERDERAIR VA 50 metallic

Technical data		
Weight [lbs/kg]	Aluminum with Aluminum center section	58/26.3
	Stainless Steel with Aluminum center section	111/50
	Ductile iron with Aluminum center section	130/59
	Stainless Steel with Stainless Steel center section	134/60
	Ductile iron with Stainless Steel center section	130/59
Suction lift [ft/m]	Dry	18/5.48
	Wet	18/5.48
Temperature max [°F/°C]	Aluminum	150/65.5*
	Stainless Steel	150/65.5*
	Cast Iron	150/65.5*
Max. particle size [in/mm]		0.25/6.3
Non wetted material, center section	Aluminum/Stainless Steel	

** 220/104.4 with Teflon diaphragms*

codes VA 50
no.2 no.3 no.4

no.2 wetted material
- AL = Aluminum
- SS = Stainless Steel
- CI = Cast Iron

no.3 seat material
- PP = Polypropylene
- SS = Stainless Steel
- HS = Hardened Steel
- VT = Viton
- HY = Hytrel
- SP = Santoprene
- GE = Geolast
- BN = Buna-N
- KY = Kynar

no.4 valve material
- TF = Teflon
- HY = Hytrel
- HS = Hardened Steel
- SP = Santoprene
- VT = Viton
- GE = Geolast
- AC = Acetal
- BN = Buna-N

no.5 diaphragm material
- TF = Teflon
- HY = Hytrel
- SP = Santoprene
- VT = Viton
- GE = Geolast
- BN = Buna-N

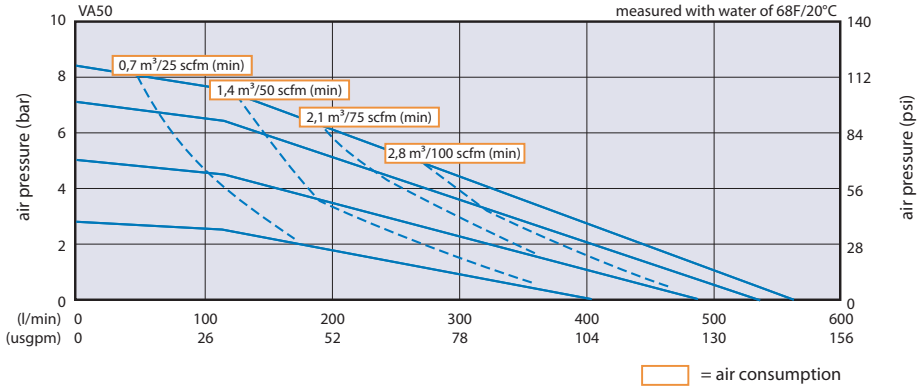

Dimensions				
	Stainless Steel	**Ductile Iron**	**Aluminum**	**Aluminum Extension ***
A	8.9 in/227.7 mm	8.4 in/213.1 mm	8.4 in/213.1 mm	8.4 in/213.1 mm
B	9.4 in/239.0 mm	9 in/230.1 mm	9 in/230.1 mm	9 in/230.1 mm
C	15.5 in/393.7 mm	12.3 in/312.4mm	12.3 in/312.4 mm	12.3 in/312.4mm
D	6.5 in/165.1 mm	6 in/152.4mm	6 in/152.4 mm	6 in/152.4 mm
E	18 in/458.9 mm	17.4 in/443.2mm	17.4 in/443.2 mm	17.4 in/443.2mm
F	22.3 in/565.7 mm	19.3 in/492mm	20 in/505.5 mm	22.8 in/579.1 mm
G	24.6 in/625.8 mm	21.3 in/542.8 mm	22 in/556.3 mm	24.9 in/631.9 mm
H	26.2 in/668.0 mm	23 in/584.2 mm	23.5 in/597.7mm	26.5 in/673.3 mm
J	2.37 in/60.2 mm	2 in/50.8 mm	2 in/50.8 mm	2 in/50.8 mm
K	0.94 in/24.1 mm	0.38 in/9.7 mm	0.38 in/9.7 mm	0.38 in/9.7 mm

** Aluminum extended pump matches the inlet to outlet dimensions of Wilden and Aro Aluminum pumps. This will help for ease of installation during upgrades.*

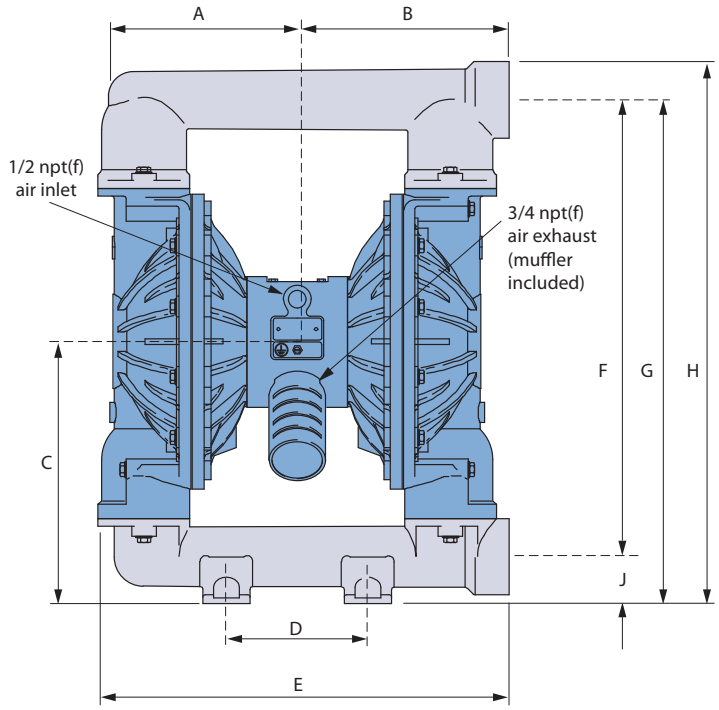

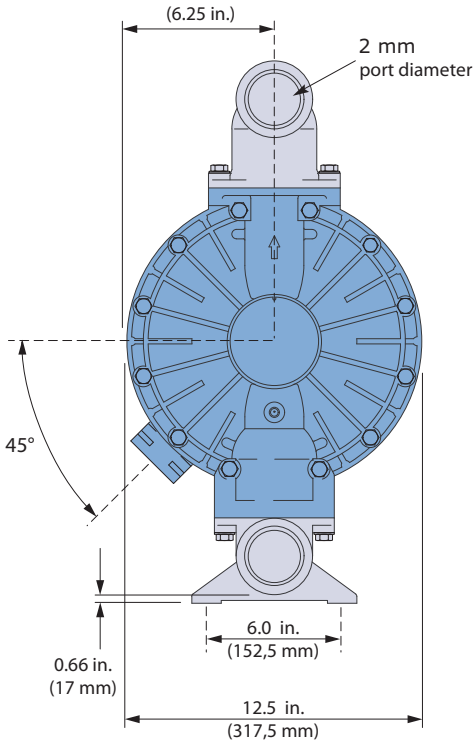

VERDERAIR VA 50 non-metallic

Technical data		
Weight [lbs/kg]	PP with Aluminum center section	49/22
	PP with Stainless Steel center section	68.5/31
	Kynar with Aluminum center section	68/30.8
	Kynar with Stainless Steel center section	87.5/39.6
Suction lift [ft/m]	Dry	18/5.48
	Wet	18/5.48
Temperature max [°F/°C]	PP	150/65.5*
	Kynar	150/65.5*
Max. particle size [in/mm]		0.25/6.3
Non wetted material, center section	Aluminum/Stainless Steel	

** 220/104.4 with Teflon diaphragms*

codes VA 50 no.2 no.3 no.4 no.5
no.2 wetted material
PP = Polypropylene
KY = Kynar
no.3 seat material
PP = Polypropylene
HY = Hytrel
SS = Stainless Steel
GE = Geolast
HS = Hardened Steel
KY = Kynar
SP = Santoprene
BN = Buna-N
VT = Viton
no.4 valve material
TF = Teflon
HY = Hytrel
HS = Hardened Steel
AC = Acetal
SP = Santoprene
VT = Viton
GE = Geolast
BN = Buna-N
no.5 diaphragm material
TF = Teflon
HY = Hytrel
SP = Santoprene
VT = Viton
GE = Geolast
BN = Buna-N

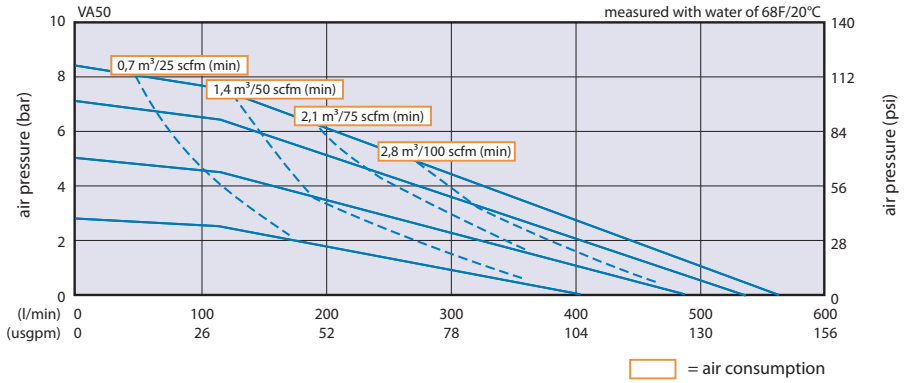

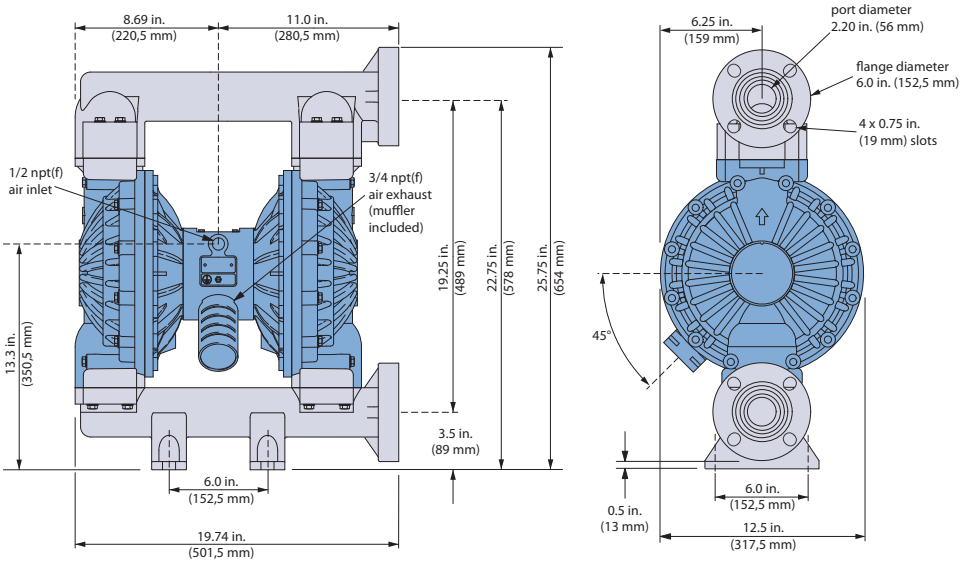

VERDERAIR VA 80

Technical data		
Weight [lbs/kg]	Aluminum	150/68
Suction lift [ft/m]	Dry	8.2/2.5
	Wet	27.9/8.5
Temperature max [°F/°C]	Aluminum	150/65.5*
Max. particle size [in/mm]		0.38/9.4
Non wetted material, center section	Aluminum	

** 220/104.4 with Teflon balls*

codes VA 80 no.2 no.3 no.4 no.5	
no.2	wetted material
	AL = Aluminum
no.3	seat material
	SS = Stainless Steel
	SP = Santoprene
	GE = Geolast
	HY = Hytrel
no.4	valve material
	TF = Teflon
	SP = Santoprene
	GE = Geolast
	AC = Acetal
no.5	diaphragm material
	TF = Teflon
	HY = Hytrel
	SP = Santoprene
	GE = Geolast

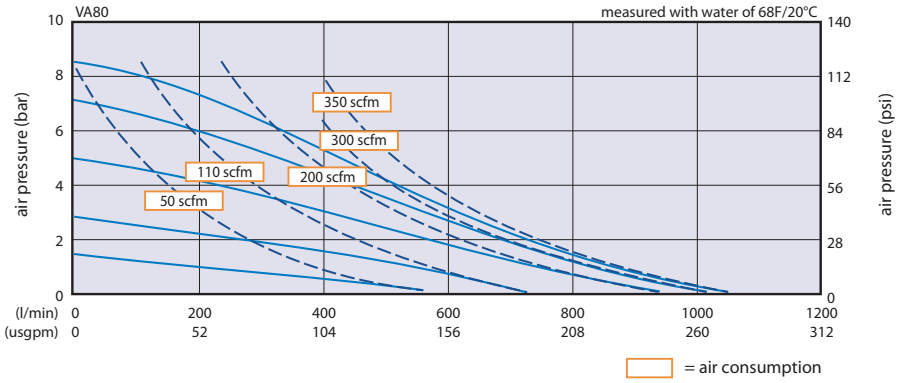

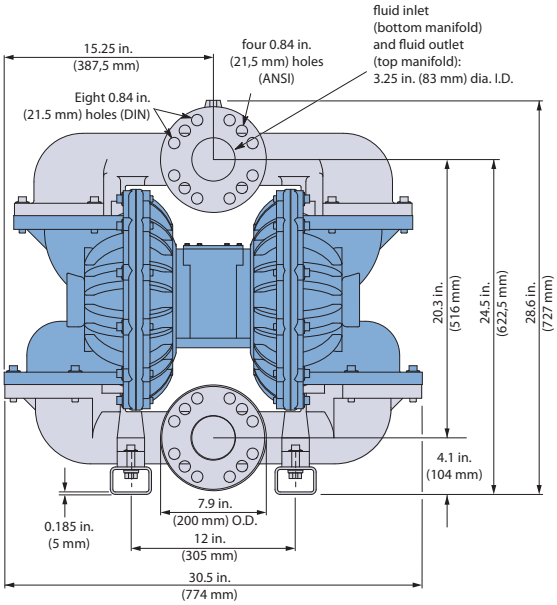

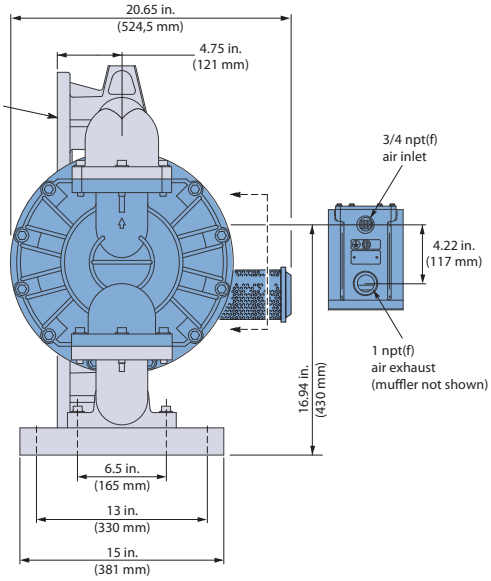

Pump Model Selection Menu

VA	25	PP	PP	TF	TF
Verderair	**Size**	**Body**	**Seats**	**Balls**	**Diaphragms**
Connection 8: ¼″ 10:⅜″ 15:½″ 20: ¾" 25:1″ 40:1½″ 50:2″ 80:3″	**Material** AC:Acetal PP:Polypropylene KY:Kynar (PVDF) SS:SS 316 CI:Cast Iron AL:Alu	**Material** AC:Acetal PP:Polypropylene HY:Hytrel KY:PVDF SS:SS 316 HS:Hard Steel SP:Santoprene VT:Viton GE:Geolast BN:Buna-N	**Material** AC:Acetal SP:Santoprene GE:Geolast BN:Buna-N VT:Viton TF:Teflon SS:SS 316 HS:Hard Steel	**Material** VT:Viton SP:Santoprene GE:Geolast BN:Buna-N TF: Teflon HY: Hytrel	

Applications

Automotive industry
Grinding emulsion
Oil
Coolant
Hydraulic fluid
Sulphuric acid
Automotive primer
Soluble oil
Varnish disposal
Varnish additives
Degreasing baths
Cutting oil
Ware and glycol mixture
Paint

Aviation
Aircraft fuelling and drainage
Satellite refueling
Solid rocket propellant
Missile silo's

Beverages
Yeast
Diatomaceous earth
Slurry
Dregs
Hot pulp
Liquid hops
Sugar syrup
Concentrates
Gas-liquid mixtures
Wine
Fruit pulp
Fruit juice
Corn syrup

Ceramics
Slip
Glaze
Enamel slip
Effluent
Clay
Clay slurry
Jime slurry
Kaolin slurry

Chemical industry
Acids
Alkaline
Solvents
Suspensions
Dispersions
Magnesium hydroxide
Varnishes
Sump water
Resins
Latex
Adhesives
Effluent sludge
Stabilizers
Filter press
Electrolyte

Construction industry
Sump and pit drainage
Cement slurry
Ceramic tiles adhesive
Rock slurry
Ceiling coating paints
Texture spray

Cosmetics
Lotions
Creams
Shampoos
Emulsions
Hand creams
Surfactants
Hair permanents
Soaps

Electronic industry
Solvents
Electroplating baths
Ultrapure liquids
Carrier fluids for ultrasonic washing
Sulfuric
Nitric and acid wastes
Etching acids
Mek
Acetone
Polishing compounds

Food
Brine
Chocolate
Vinegar
Molasses
Dog food
Vegetable oil
Soy bean oil
Honey
Cat food
Hci
Animal blood
Sour cream
Ice cream
Milk
Yoghurt
Light viscosity cheeses
Pharmaceutical lotions
Concentrated fruit juices
Tomato paste
Wine
Oils
Jams & jellies
Sauces, pastes and starches
Corn syrup
Mineral oil
Lanolin alcohol
Glycol
Animal blood

Furniture industry
Adhesives
Varnishes
Dispersions
Solvents
Stains
Elmers glue
White wood glue
Solvents
Glue
(5-6000 cps) Epoxy
Starch adhesives
Spray packages

Mining
Sump gallery drainage
Sewer cleaning
Coal sludge and rock
Slurry
Cement slurry
Grouting mortar
Oil transfer
Explosive slurry
Adhesives
Lube oil
Foaming

Municipalities
Tank and sump drainage
Sewer cleaning chemicals
Contaminated surface water
Emergency pumping
Spill clean-up
Waste-oil
Oil / water separators

Paint and coatings
Resins
Solvents
Acrylic
Wood preservative stain
Concrete paints
Varnishes
Titanium dioxide slurry
Primers
Stains
Dispersions
Varnish cleaning baths
Alkaloid resin

Pharmaceutical industry
Vegetable extracts
Tablet pastes
Ointments
Alcohols
Filtering aids
Ultra filtration
Blood plasma
Waste solvents
Sump waste

Plating
Anodic sludge
Electroplating baths
Varnishes
Enamels
Solvents
Cleaning baths
Filtering

Pulp/paper/packaging
Latex
Adhesives
Paints
Resins
Printing inks
Dispersions
Tio2 slurry
Kaolin clay
Hydrogen peroxide

Refineries
Tank roof drainage
Oil sludge
Tank cleaning
Tank moat drainage
Portable pumping

Road tanker trucksloading and draining of tank by means of pump on vehicle
Tank vehicle washing facilities
Acid spraying
Foaming

Shipbuilding
Tank and bilge drainage
Ship cleaning
Stripping
Oil skimming
Seawater smelters
Foundries and dye casting
Metal slurry
Hydroxide and carbide slurry
Dust scrubbing slurry
Back wash for flushing of cores
Mould release

Textile and carpet
Dyeing chemical
Scotchgard*
Starch and sizing
Resins
Dyes

Water and sewage treatment
Milk of lime
Thin slurry
Effluents
Chemicals
Charging of filter presses
Polymer
Waste water

Utility contaminated
Liquids
Charging of scrubbers
Milk of lime
Transformer oil
Resins

** official trademark of 3M*

The Verder Group
Passion for pumps

Liquids handling is the original passion of the Verder Group. Its liquids handling companies supply a wide range of first-class pumps for a variety of industrial purposes.

Verder Liquids is active in many industrial sectors: chemical and process industry, food, pharmaceutical, water treatment, and environmental industries.

Within these industries pump requirements vary enormously and applications and needs change frequently. In order to ensure we provide the best solutions. We analyze and monitor industrial trends as well as maintaining close relationships with our customers.

International presence
The Verder Group Liquids division has affiliates in:
Austria - Belgium - China - Czech Republic - France - Germany
Great Britain - Hungary - The Netherlands - Poland - Romania
Slovakia - South Africa - United States of America.

Your advantages
The advantages of working with us are clear, we offer you:

- single-source solutions: Verder's wide and complementary range of pumps allows you to source your entire pumping needs from one company, reducing your costs;
- expertise: years of providing pumping solutions to industry have given us valuable expertise and knowledge which we are able to use to supply the most appropriate and reliable pumps;
- international affiliated company: our size gives you the confidence that you are dealing with a powerful international pump company and if your project involves overseas work then you can profit from our international network of companies.

Contact Verder
If you would like to know more about our pumping solutions then please visit our website www.verder.com/liquidshandling.
You will find the full range of our pump ranges as well as application stories, latest news and the contact details of our local specialist.

Notes

Notes

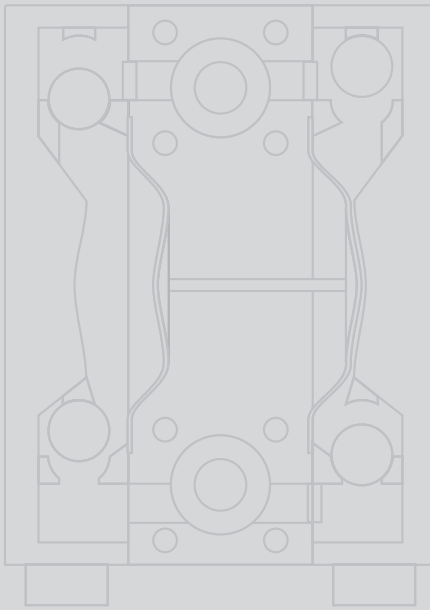

Verderair Double Diaphragm Pumps are problem solvers in all industries

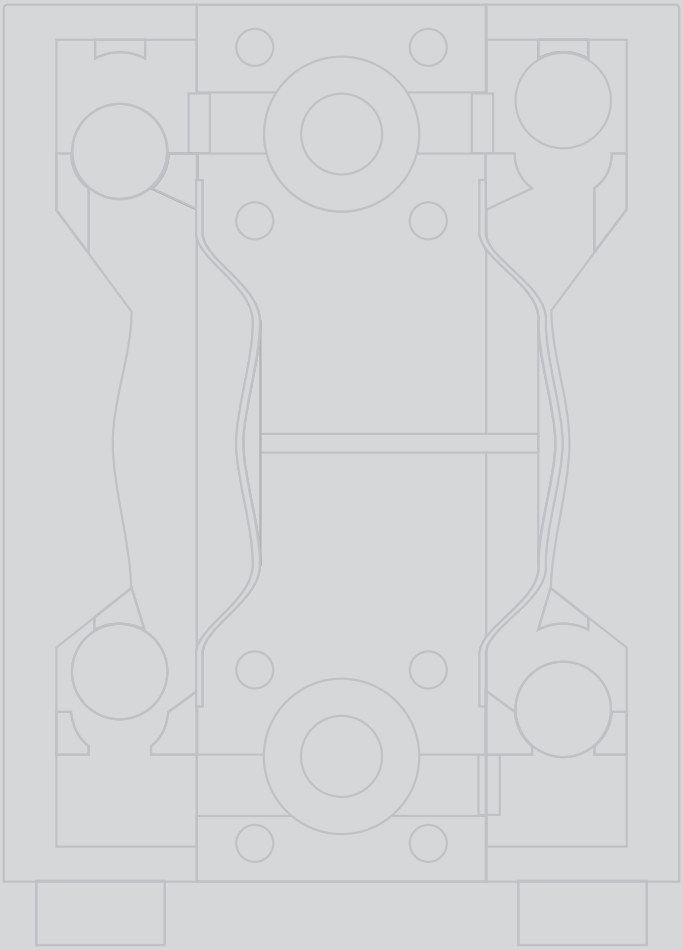

Any questions? You may still have questions and/or comments after reading this brochure. Please feel free to contact us on 1 877 7 VERDER You can also respond via email to info@verder.com. For more information about Verderair please visit our website **www.verdergpm.com**

VERDERAIR

VerderGPM
110 Gateway Drive
Macon, GA 31210
United States of America

TEL +1 478 471 7327
FAX +1 478 476 9867
MAIL info@verder.com
WEB www.verdergpm.com

AT Vienna **BE** Aartselaar **CH** Basel **CN** Shanghai **CZ** Prague **DE** Haan
FR Eragny s/Oise **GB** Leeds **HU** Budapest **IT** Torre Boldone **JP** Tokyo
NL Groningen/Vleuten **PL** Katowice **RO** Bucuresti/Sibiu **SK** Bratislava
US Newtown/Macon **ZA** Northriding

15-03-2011-US-REV-01